Купить данную позицию можно на сайте: https://kvarci.ru/

宁波福爱斯电子有限公司
NINGBO VOISE ELECTRONICS CO.,LTD.
Tel:0086-0574-87471601
Fax:0086-0574-87471603

SPECIFICATION

FOR APPRONAL

Customer :

Product Name : SMD Buzzer

Model Name : VS8530A

Drawing No. : VS20181215015

Signature of Voise

Approved by	Checkde by	Issued by	Date

福爱斯电子有限公司
VOISE ELECTRONICS CO.,LTD.
Office Add:Haoyangguang B-302# No.968 Baizhang Road,Ningbo China
Factory add: Shishan Industrial Park Moushan Town Yuyao City China
Tel:86-0574-87471601 Fax:86-0574-87471603 P.C.315000
Http://www.nbvoise.com E-mail:sales@nbvoise.com

Для заказа отправьте заявку на почту: mail@kvarci.ru

Купить данную позицию можно на сайте: https://kvarci.ru/

Table of contents

1. Revision
2. Scope
3. General Characteristics
4. Electrical and Acoustic Characteristics.
5. Reliability Test
6. Measurement Method & Frequency Response curve
7. Recommended temperature profile for reflow oven
8. Recommended land pattern
9. Dimensions
10. Packing

1. Revision

Rev.No.	Date	Page	Description of Revision
1.0	2018/12/15		Preliminary

Для заказа отправьте заявку на почту: mail@kvarci.ru

Купить данную позицию можно на сайте: https://kvarci.ru/

2. Scope

This product specification is applied to the Magnetic Buzzer in alarm systems.Please contact us when using this product for any other applications than described in the above.

3. General Characteristics

3.1 Dimension : 8.5x8.5 mm

3.2 Height : 3 mm

3.3 Weight : 0.5 g

3.4 Operating Temperature : -30~+80℃ without loss of function

3.5 Store Temperature : -40~+90℃ without loss of function

3.6 Environmental protection rule :ROHS

4. Electrical and Acoustic Characteristics.

Test condition :15 ~ 35 ℃ Temp., 45% ~ 85% RH,86~106 kPa Refer to IEC60268-1

No	Items	Specification
1	Oscillation Frequency	2731 Hz
2	Operating Voltage	2.5 ~4.0 Vo-p
3	Rated Voltage	3.0 Vo-p
4	Min Sound Preesure Level	85 at 10cm Rated Voltage/2731Hz,quare wave 1/2duty
5	Max Current Consumption	90mA at Rated Voltage/2731Hz,quare wave 1/2duty
6	Coil Resistance	16 ± 3Ω
7	Housing Material	LCP
8	Color	Black
9	Pad plating	Sn

Для заказа отправьте заявку на почту: mail@kvarci.ru

Купить данную позицию можно на сайте: https://kvarci.ru/

5. Reliability Test

After test(1~5item), the buzzer S.P.L . difference shall be within ±10dB, and the appearance not exist any change to be harmful to normal operation

No	Items	Specification
1	High Temp.Test	After being placed in a chamber at +80±2 ℃ for 96h and then being placed in natural condition for 4h, and then check.
2	Low Temp.Test	First being placed in a chamber at -30±2 ℃ for 96h and then being placed in natural condtion for 4h, and then check.
3	Temp./Humidity Test	The buzzer shall be subjected to 5 cycles One cycle shall be 24 huors and consist of and then being placed in natural for 4h ,and then check. 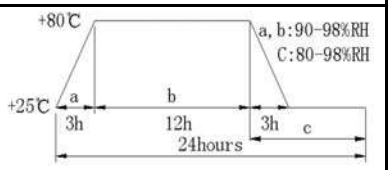
4	Thermal Shock Test	After being worked in a chamber at +80±2 ℃ for 0.5 hour, then sounder shall be placed in a chamber at -30±2 ℃ for 0.5 hour(1 cycle is the below diagram).The test duration is for 10 cycle.after being placed in natural condition for 4 hour.and then check.
5	Vibration Test	Being applied vibration of amplitude of 1.5mm with 10-55Hz band of vibration frequency,X.Y.Z.3 direction.2 hours each, total 6 hours.
6	Drop Test	Free drop fram 0.75 meter height to a board 40mm thick hard wood board 3 times in axes X.Y.Z. and be nothing mechanical damage. tatol 9 times.
7	Solderability	Lead terminals are immersed in solder bath of +235±5℃ for 3±1 seconds.95% surface of lead pads must be covered with fresh solder.
8	Soldering Heat Resistance	The product is followed the reflow temperation curve to test its reflow thermostability.No interference in operation.
9	Terminal Strength Pulling	Lead pads shall be soldered on the pc board, and the force 9.8N(1.0kg) shall be applied behaind the part for 10 seconds.No damage and cutting off.
10	Continuous life test	The part shall be subjected to 72 hours at +65℃ with 3V Vo-p, 2731Hz applied.after being placed in natural condition for 4 hour.and then check. The SPL shall be within ±10dB.
11	Intermittent life test	A duty cycle of 1 minute on, 1 minute off, a minimum of 5000 times at room temp.(25±10℃) with 3V Vo-p, 2731Hz applied. after being placed in natural condition for 4 hour.and then check. The SPL shall be within ±10dB.

Для заказа отправьте заявку на почту: mail@kvarci.ru

Купить данную позицию можно на сайте: https://kvarci.ru/

宁波福爱斯电子有限公司
NINGBO VOISE ELECTRONICS CO.,LTD.
Tel:0086-0574-87471601
Fax:0086-0574-87471603

6. Measurement Method & Frequency Response curve

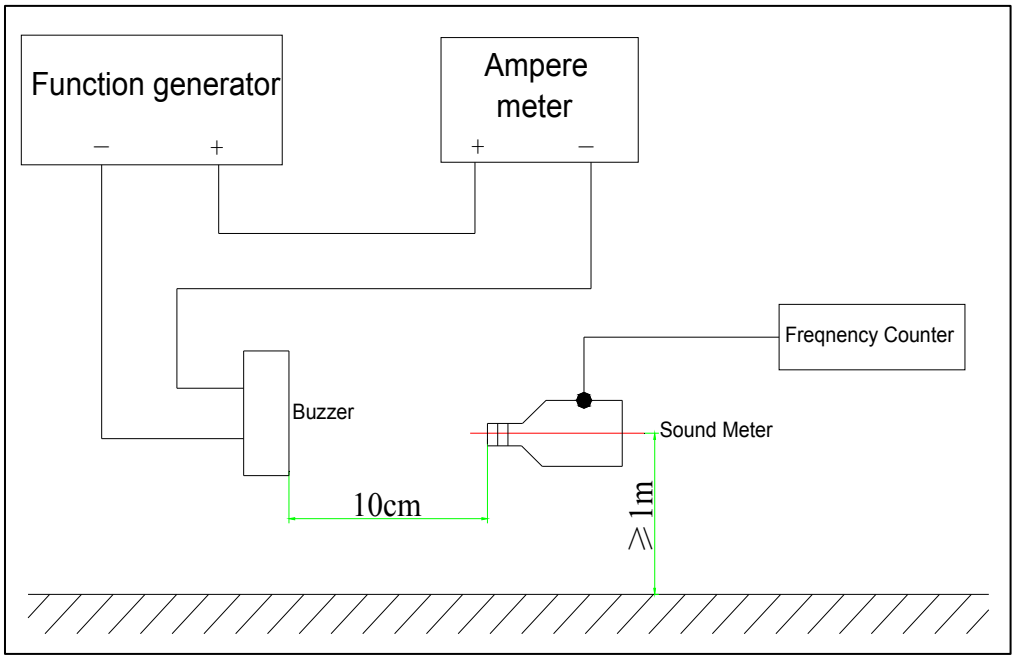

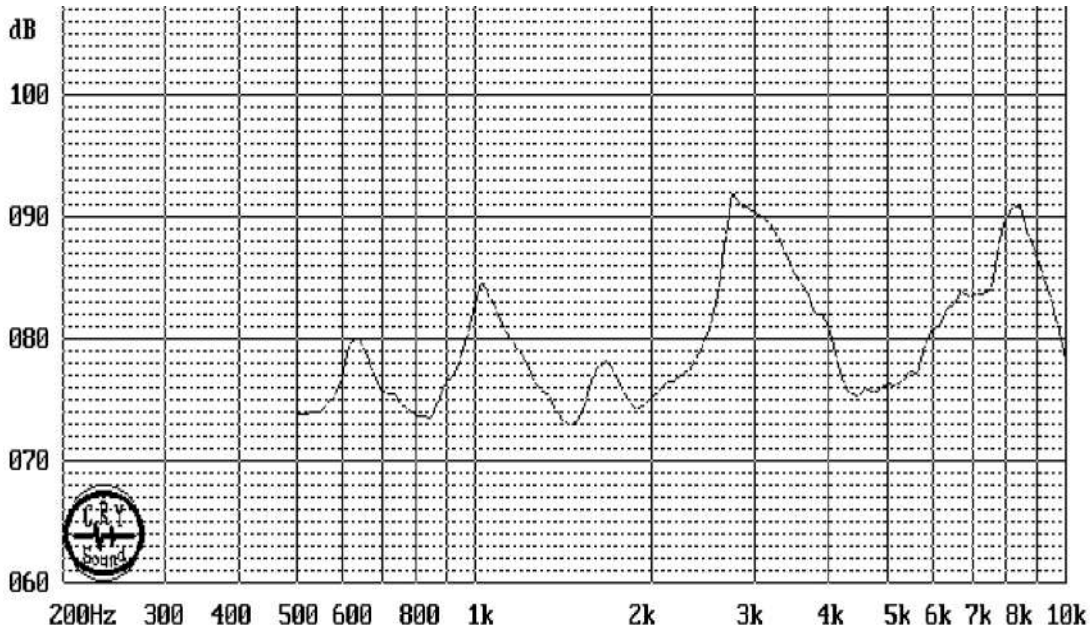

Для заказа отправьте заявку на почту: mail@kvarci.ru

Купить данную позицию можно на сайте: https://kvarci.ru/

宁波福爱斯电子有限公司
NINGBO VOISE ELECTRONICS CO.,LTD.
Tel:0086-0574-87471601
Fax:0086-0574-87471603

7. Recommended temperature profile for reflow oven

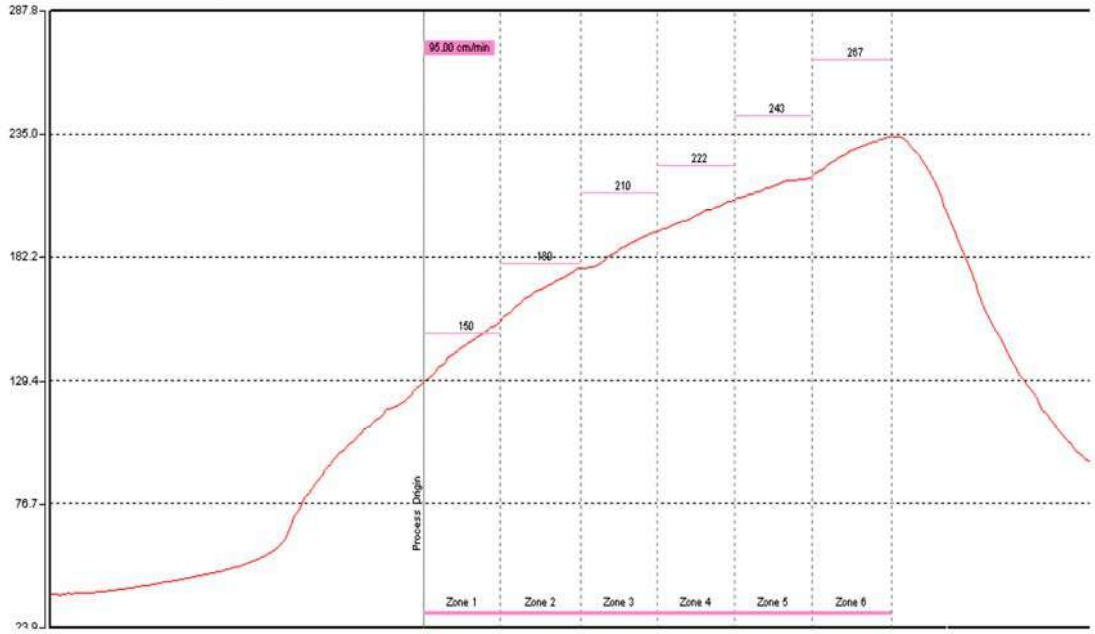

8. Recommended land pattern

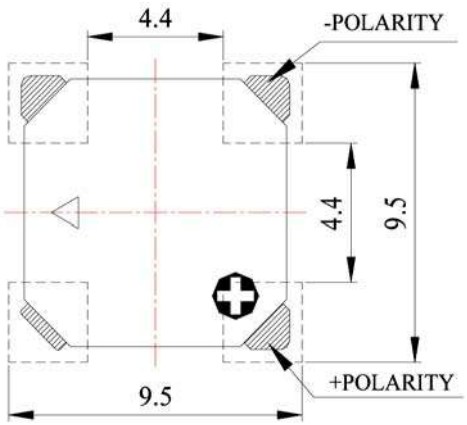

Для заказа отправьте заявку на почту: mail@kvarci.ru

Купить данную позицию можно на сайте: https://kvarci.ru/

宁波福爱斯电子有限公司
NINGBO VOISE ELECTRONICS CO.,LTD.
Tel:0086-0574-87471601
Fax:0086-0574-87471603

Specification for SMD Buzzer		Page	7/8
		Revision No.	1.0
Model No.:	VS8530A	Drawing No.	VS20181215015

9. Dimensions

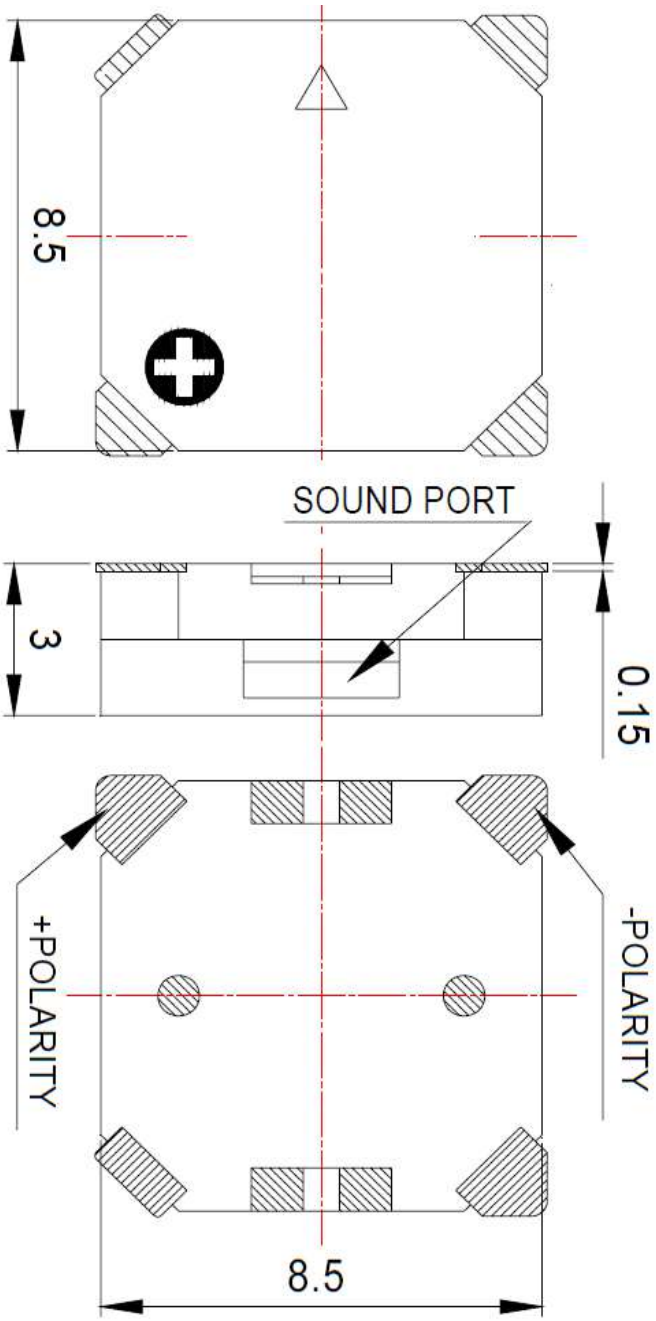

FIRST ANGLE PROJECTION

UNIT : mm
Tolerance : ±0.2

Для заказа отправьте заявку на почту: mail@kvarci.ru

Купить данную позицию можно на сайте: https://kvarci.ru/

宁波福爱斯电子有限公司
NINGBO VOISE ELECTRONICS CO.,LTD.
Tel:0086-0574-87471601
Fax:0086-0574-87471603

10. Packing

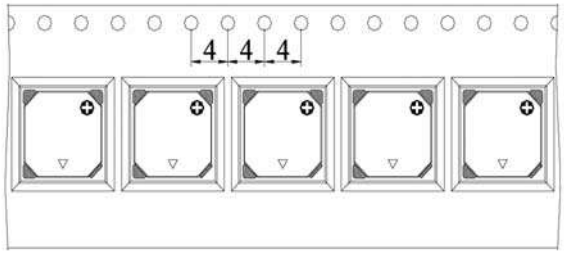

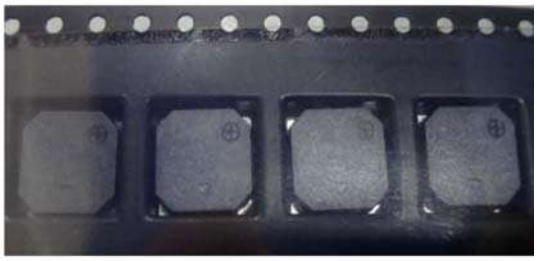

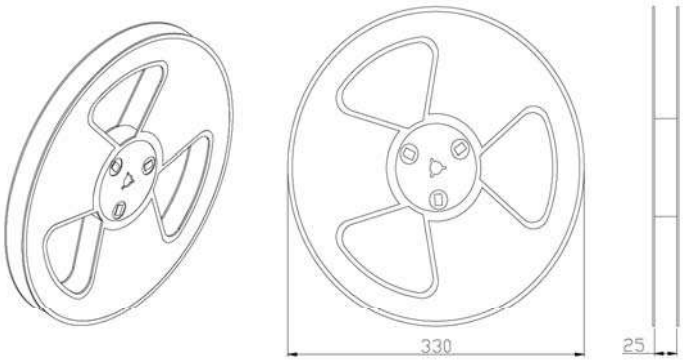

1 Reel: 1000 Pcs

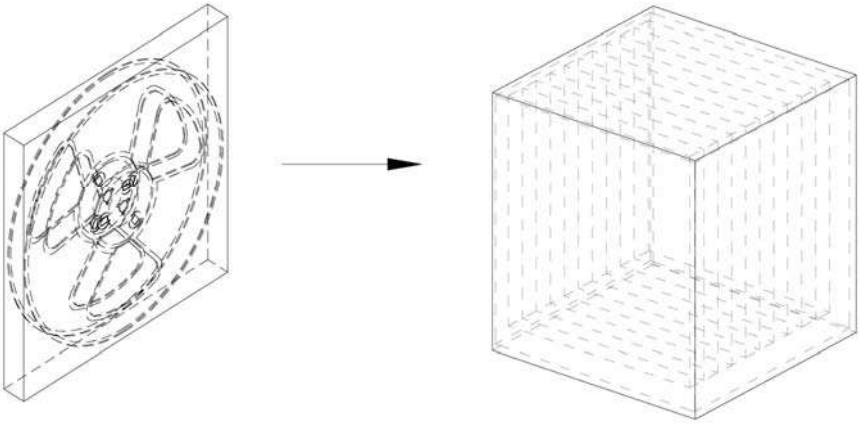

Inner Box
1 Layer Reel

Carton Box
(10 Inner Box)

1000 pcs per Reel

10 inner box for unit，10 units per carto

Total:10000 pcs per carton

Size:350X280X350mm

Для заказа отправьте заявку на почту: mail@kvarci.ru