Купить данную позицию можно на сайте: https://kvarci.ru/

SHOULDER

SMG0503(4P& 2P) Crystal

Lead free

ELECTRICAL SPECIFICATION

Frequency Range	8.0000 to 40.000 MHz
Load Capacitance	10pF to series
Frequency Tolerance (at 25°C)	±10PPM~50ppM
Oscilation Mode	Fundamental, Third Overtone
Frequency Stability in Temperature	±10ppM~50ppM
Operating Temperature Range	-20°C to +70°C Standard (or Optional)
Storage Temperature Range	-55°C to +125°C
Equivalent Series Resistance (ESR)	See ESR Table
Drive Level	10~100uW
Shunt Capacitance	7pF Maximum
Aging (at 25°C)	±3ppM per year
Insulation Resistance	500 MOhm Minimum

FREQUENCY RANGE AND OSCILLATION MODE

Fundamental (F)	8.0000 to 36.000MHz
Third Overtone (3OT)	30.000 to 40.000MHz

ESR TABLE (Ohms)

8.000 to 16.000MHz	AT Fundamental	80Max
16.000 to 36.000MHz	AT Fundamental	60Max
30.000 to 40.000MHz	3RD overtone	100Max

MECHANICAL DIMENSIONS (all in mm)

4Pads:GLASS SEAL

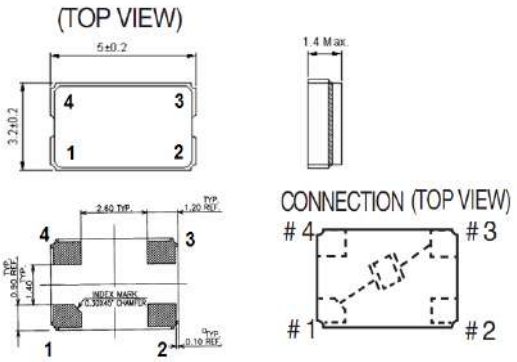

2Pads:GLASS SEAL

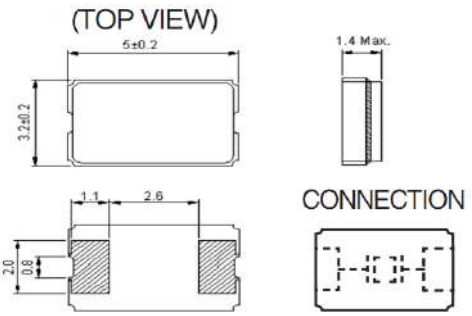

TAPE SPECIFICATIONS (all in mm) - Carrier Tape Dimensions

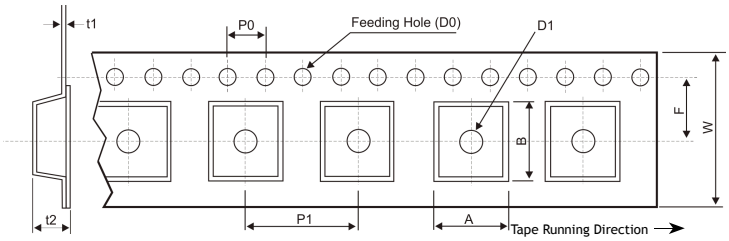

W	F	P0	P1	D0	D1	t1	t2	A	B
12±0.3	5.5±0.05	4.0±0.1	8±0.1	Ø1.5±0.1	Ø1.6±0.25	0.3±0.03	1.2±0.1	3.7±0.1	5.5±0.1

SOLDERING

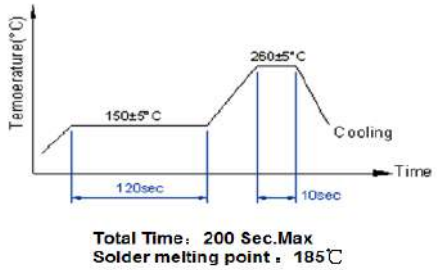

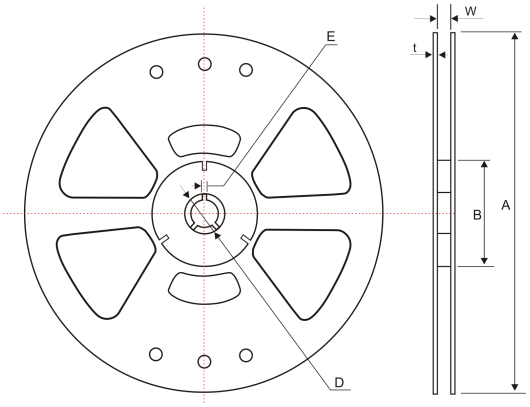

Reeling Quantity
1000pcs / reel

A	Ø178±1.0
B	Ø60±0.5
D	Ø21.6
E	2±0.5
W	12.2
t	1.6 max.

PART NUMBERING SYSTEM (Example)

SMG0503- 12.000 -F-20-30-30-A

Hold Type
2pads: SMG2P8045/ SMG2P0603/SMG2P0503
4pads: SMG0603 / SMG0503 / SMG3225

Nominal Frequency (MHz)
Enter the nominal frequency
(3 digits after dot) or up to last
significant digit different than zero)

Mode of Operation (Vibration Mode)
F= Fundamental
T= 3rd Overtone

Load Capacitance
S=Series Resonant
or enter load capacitance
10 to 33 for parallel

Operating Temperature Range (°C)
A= -20°C to 70°C
B= -10°C to 60°C
C= 0°C to 50°C
D= -30°C to 80°C
E= -40°C to 85°C

Frequency Stability (± ppm)

Frequency Tolerance (± ppm)

SHOULDER CHINA www.shoulder.cn
Add Headquarter:No. 115, Gaoyun road, Binhu Economic & Technology Development Area, Wuxi, China
Tel:0510-85629111 Fax:0510-85627222 E-mail:info@shoulder.cn

Для заказа отправьте заявку на почту: mail@kvarci.ru